Sistem Otomasi

Febrianto Amri R., ST

1. Pengumpan *(Feeding)*

- Pemisahan
- Pemindahan
- Orientasi
- Stabilitas

1. Pengumpan *(Feeding)*

❖Pengumpan Non Getar

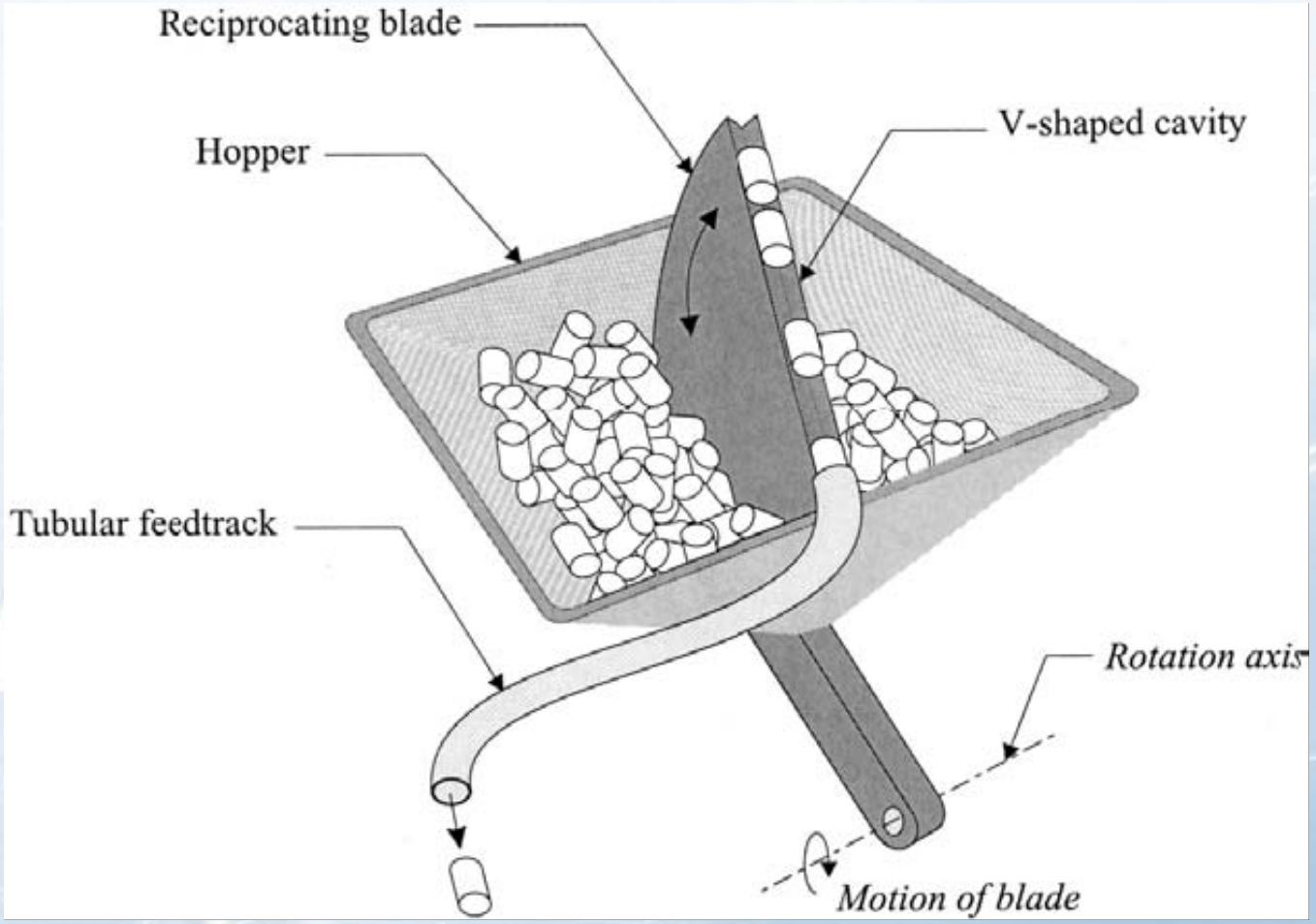

1. Pengumpan *(Feeding)*

❖Pengumpan Non Getar

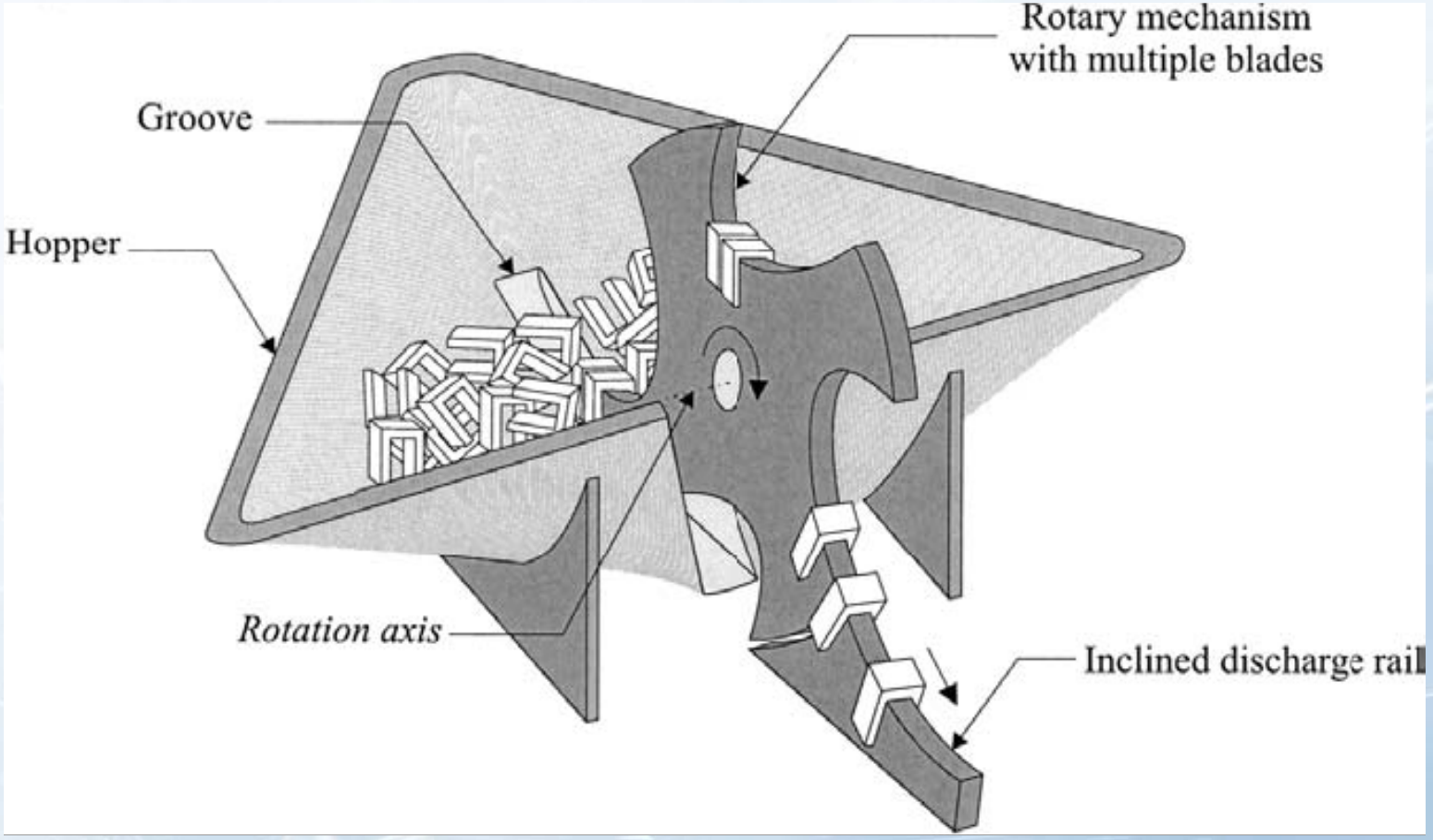

1. Pengumpan *(Feeding)*

❖Pengumpan Bergetar

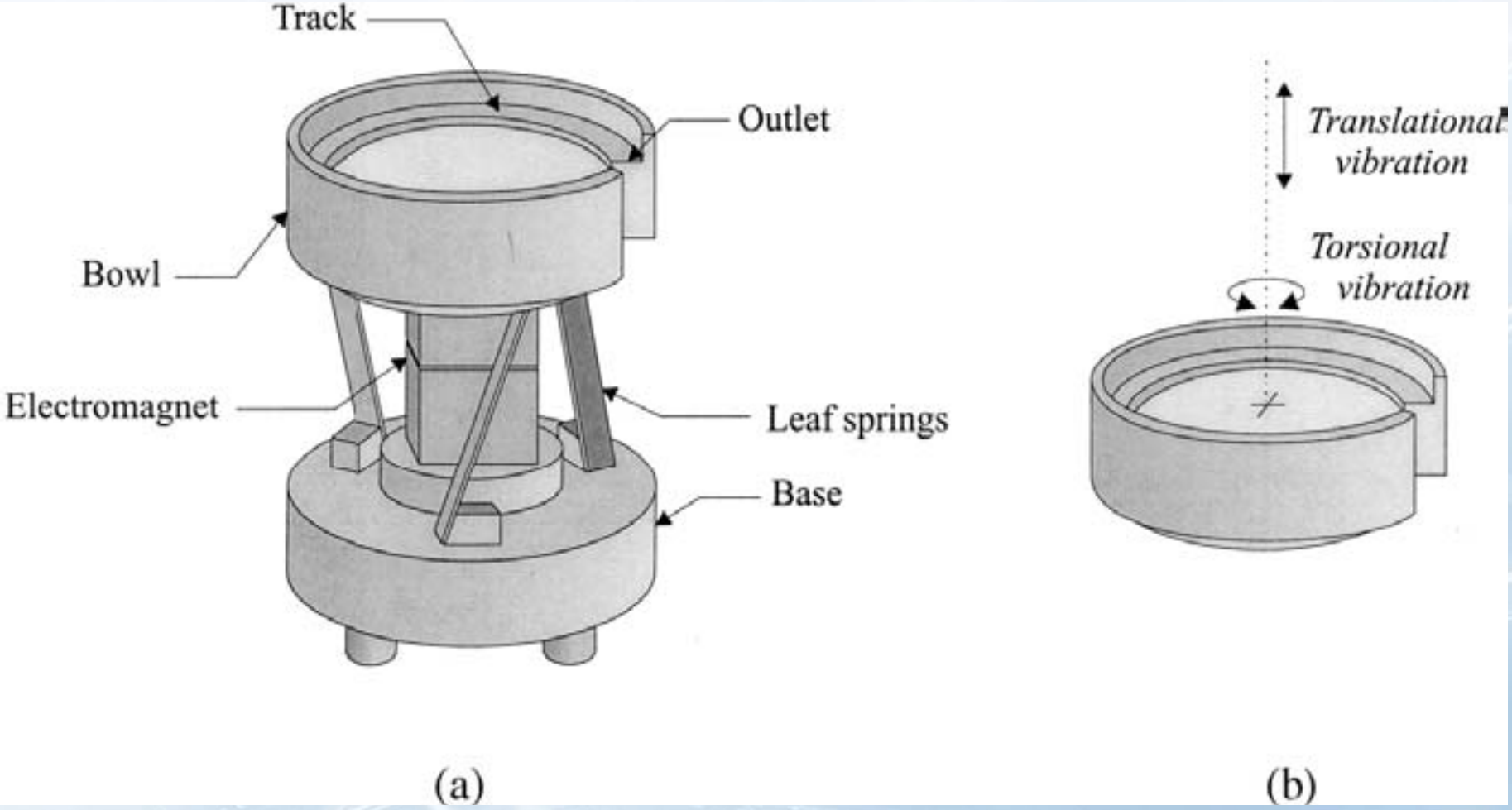

❖Pengarah

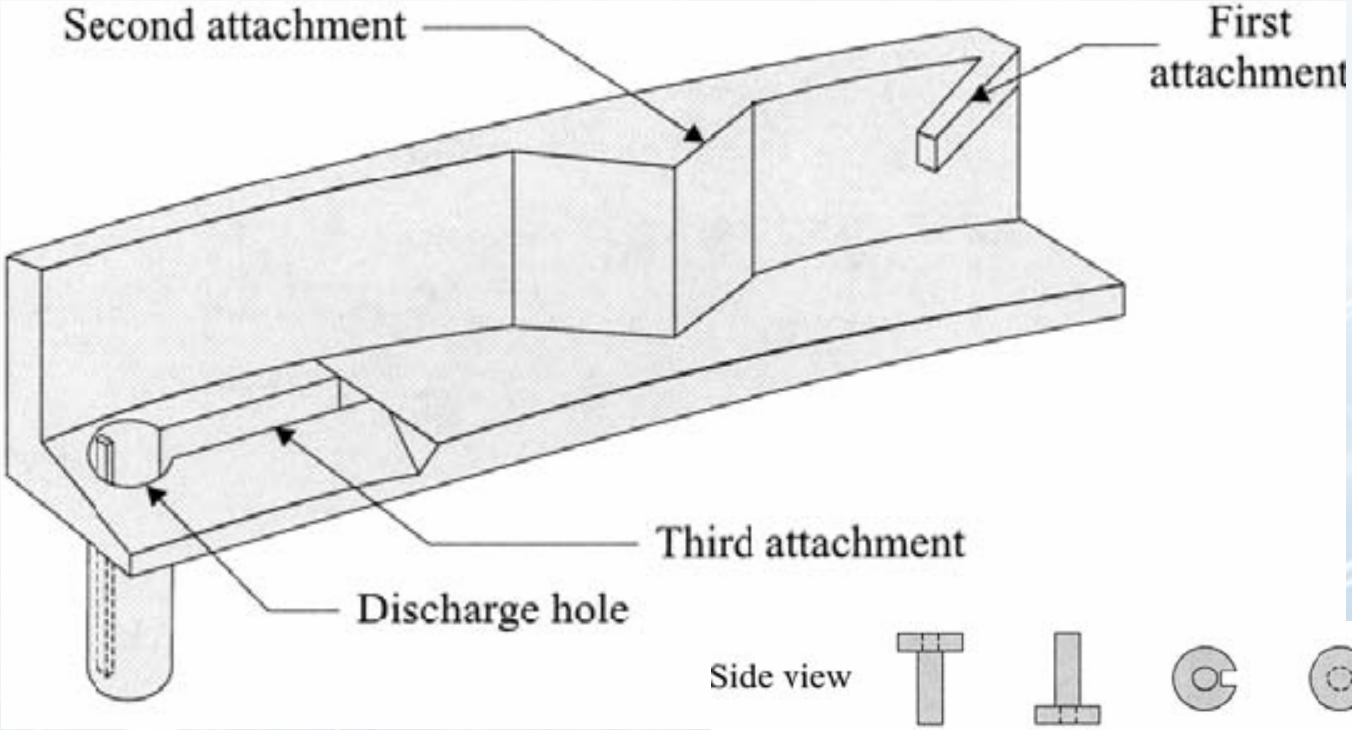
Second attachment
First attachment
Third attachment
Discharge hole

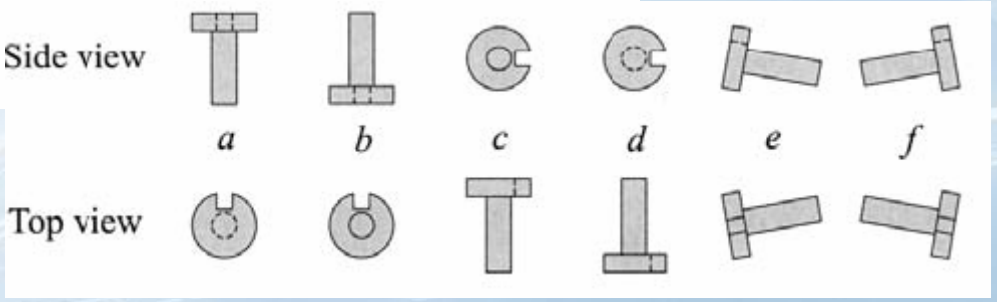
Side view
a
b
c
d
e
f
Top view

❖Pengarah

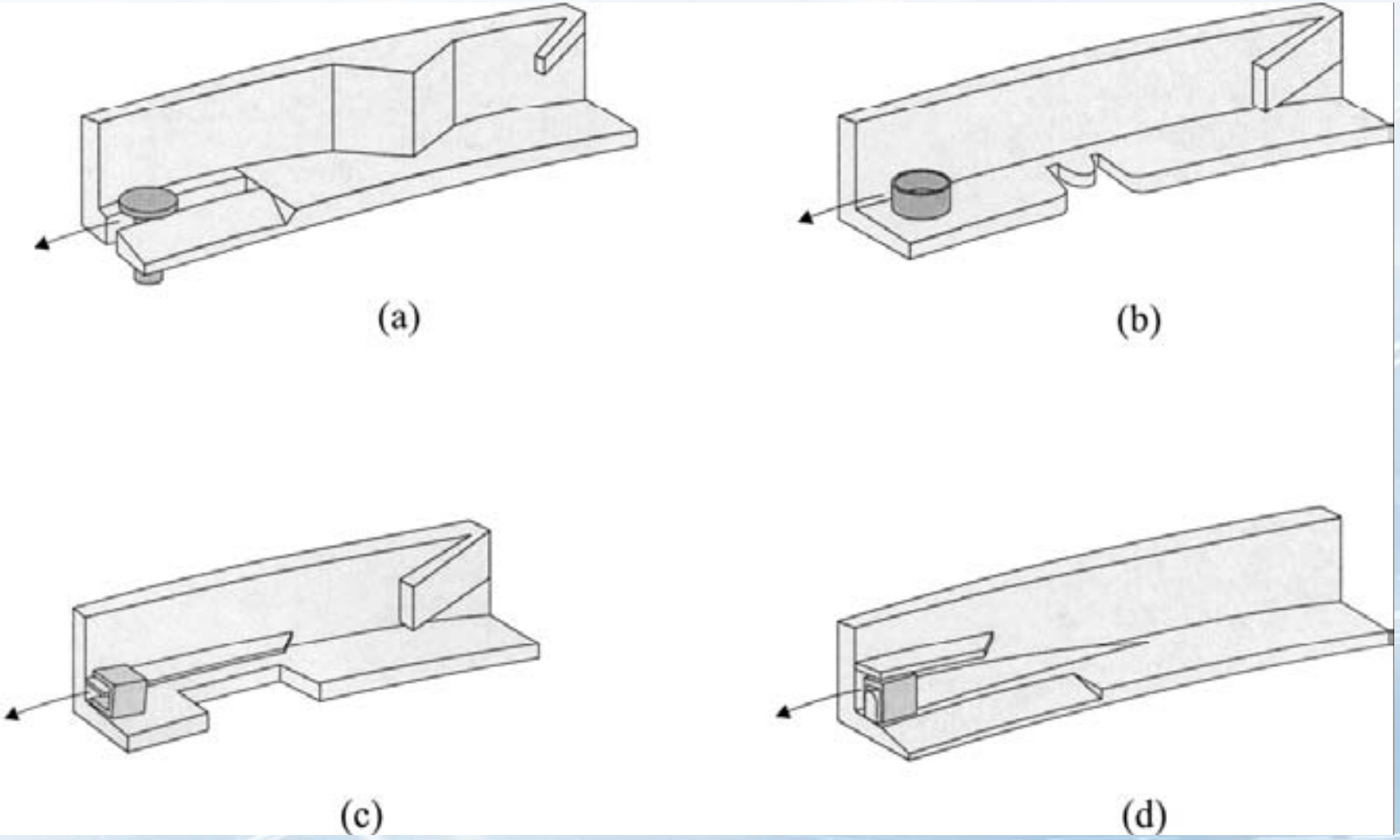

❖Jalur Pengumpan

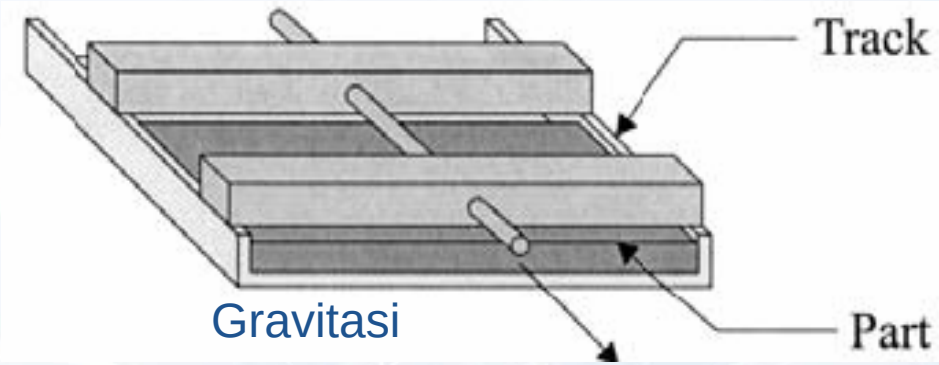

Gravitasi

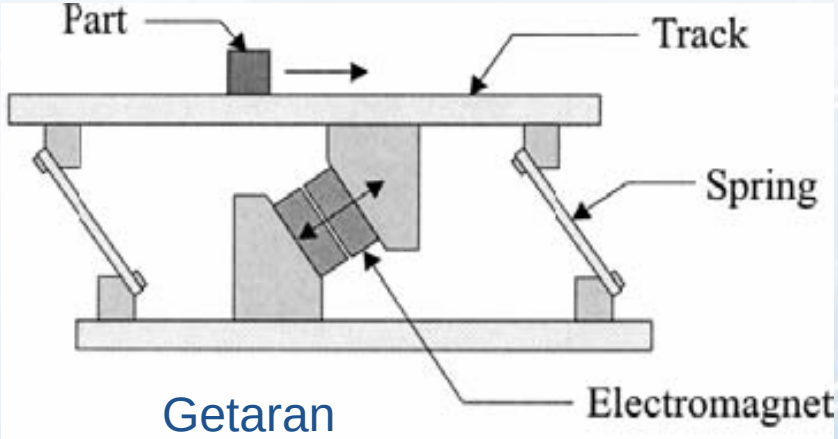

Getaran

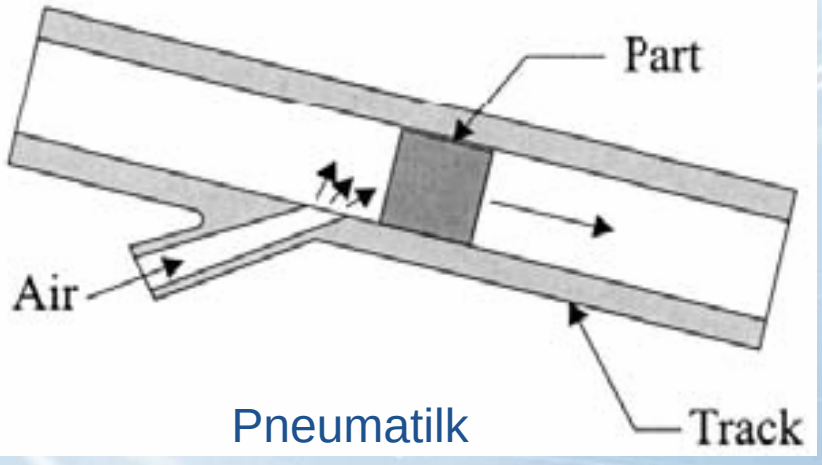

Pneumatilk

❖Jalur Pelepasan

Magazine

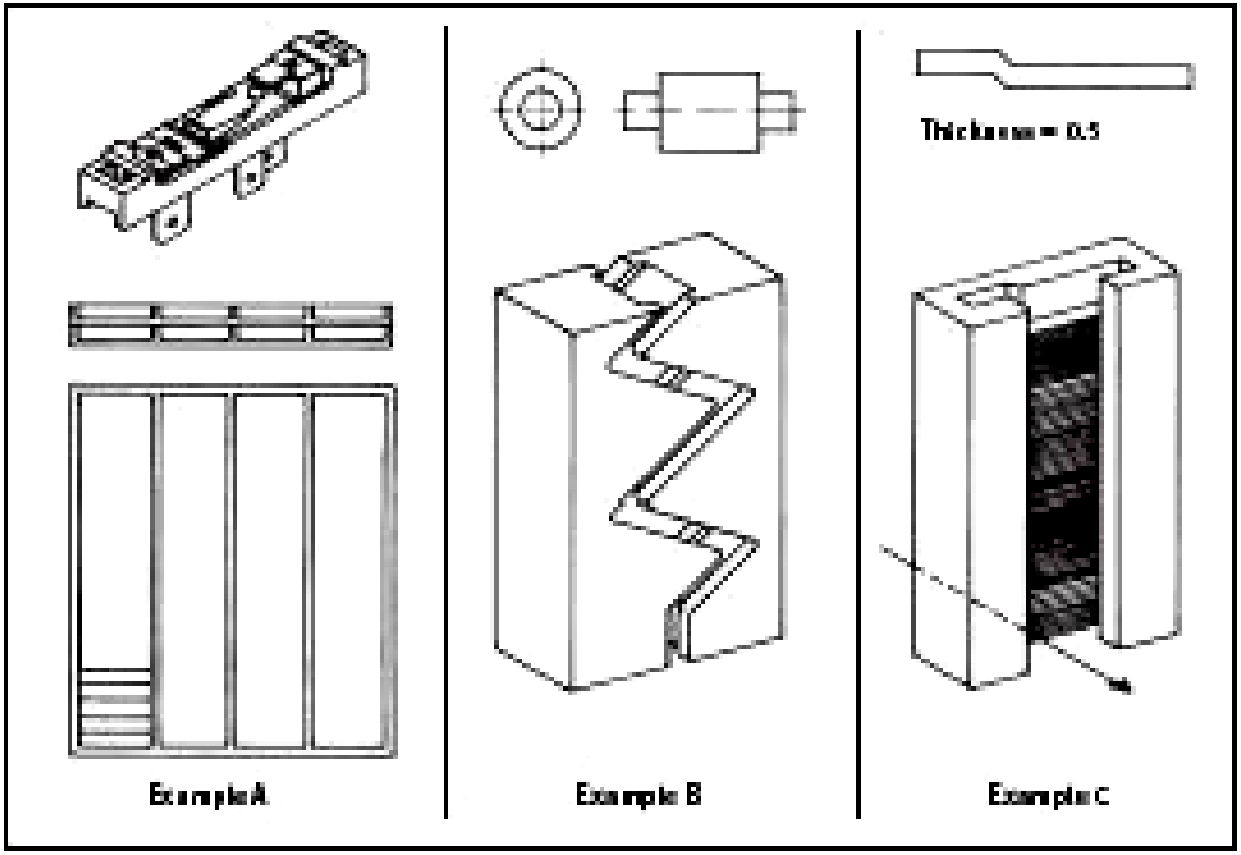

❖Pelepasan *(escapement)*

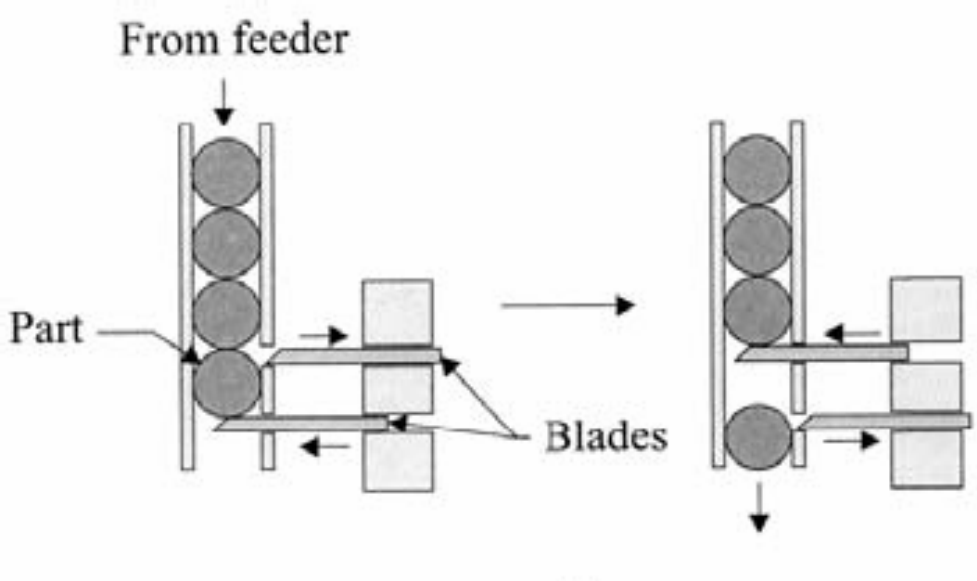

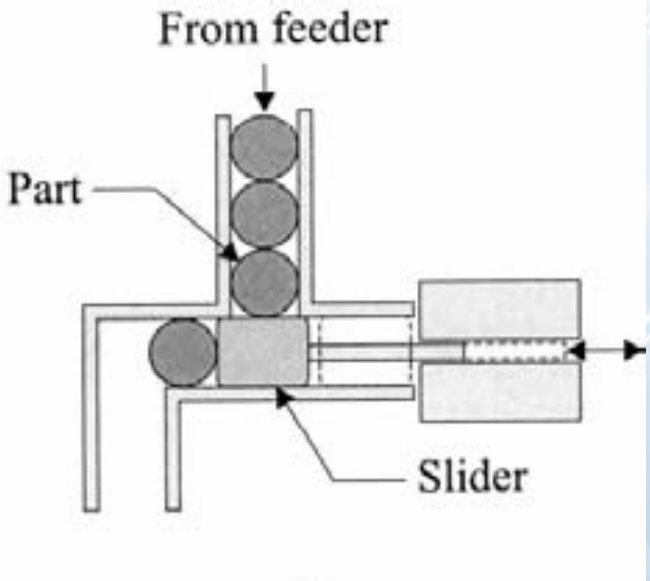

Ratchet ***Slider***

2. Peralatan Pemindah

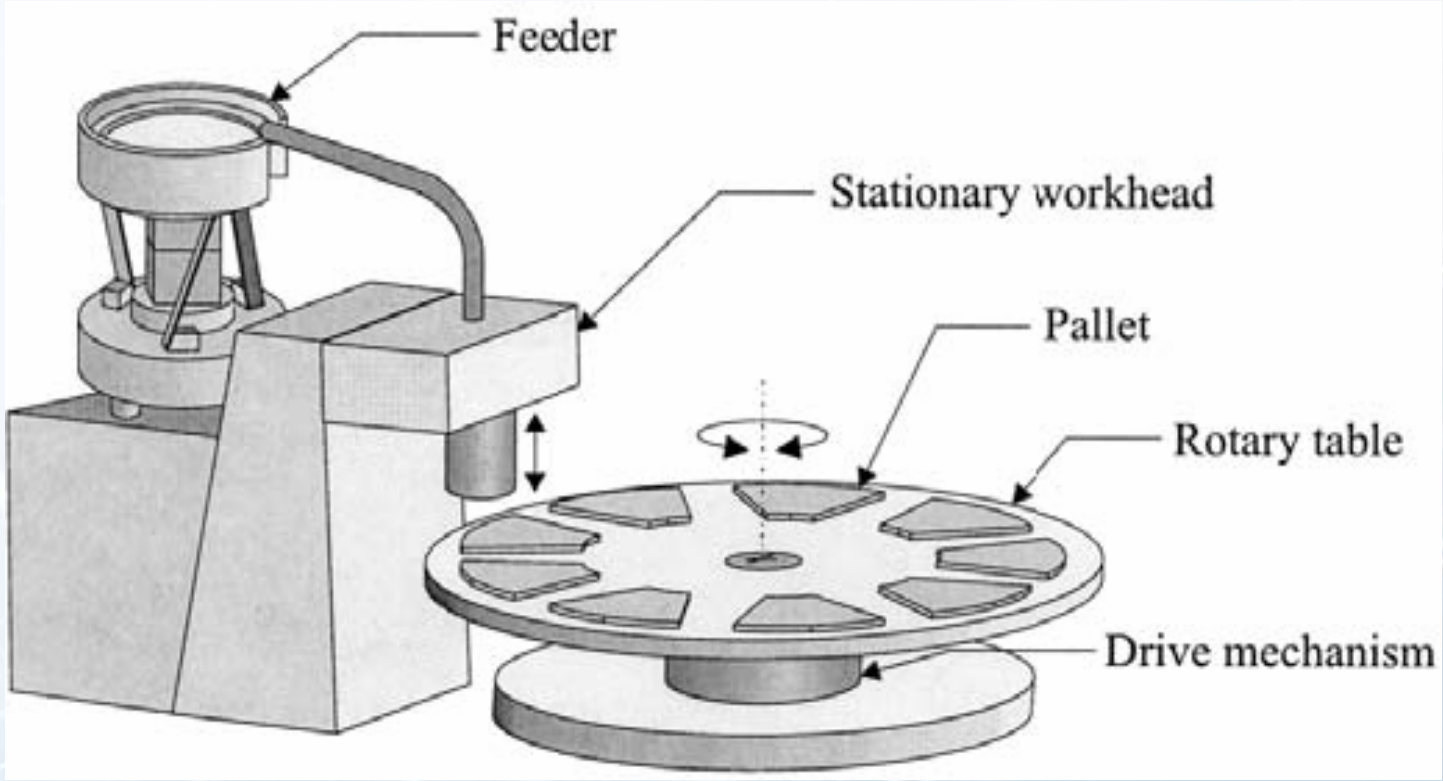

Indexing Table

2. Peralatan Pemindah

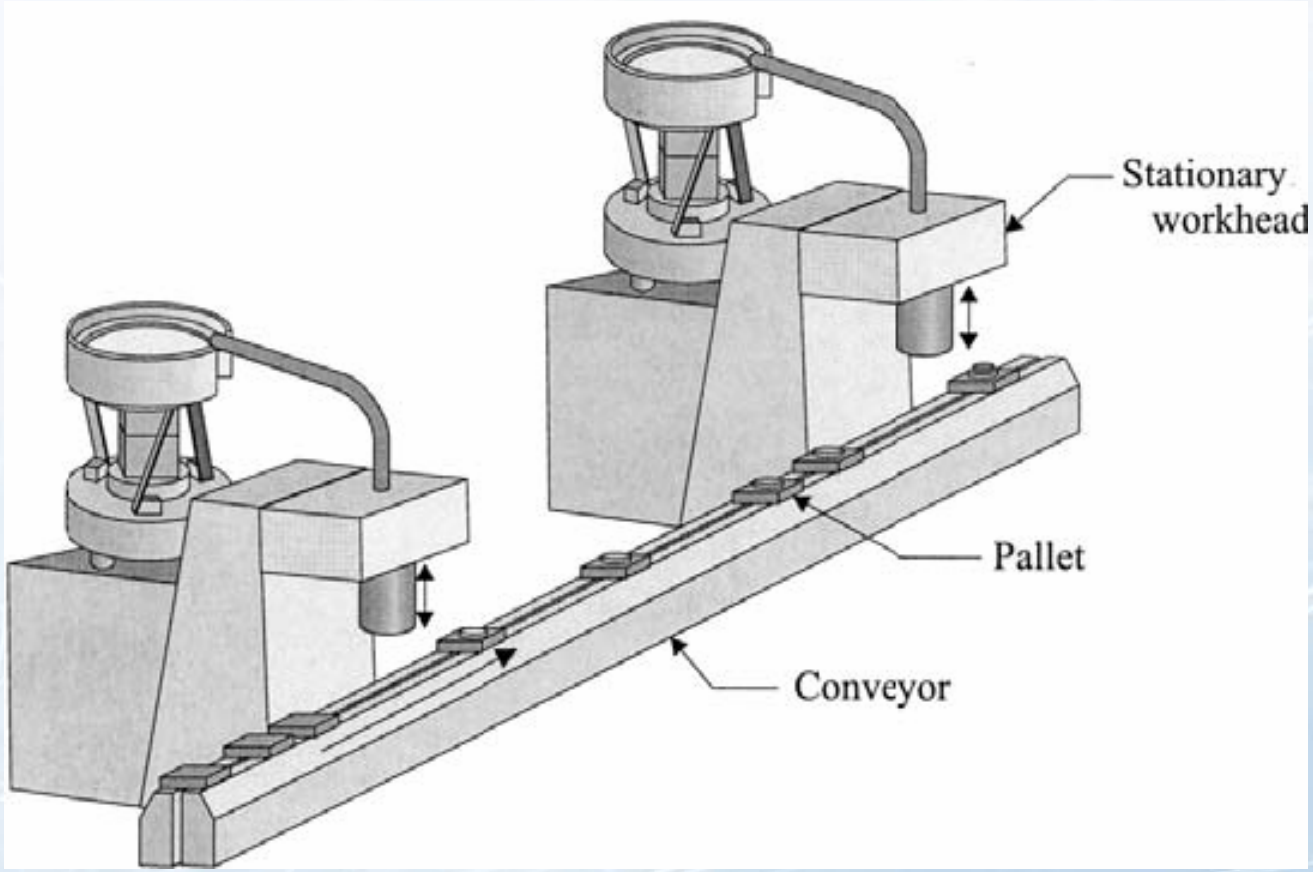

Transfer Line

2. Peralatan Pemindah

Jenis-jenis Conveyor

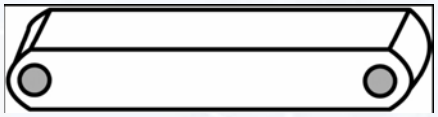

Continuous belt conveyor

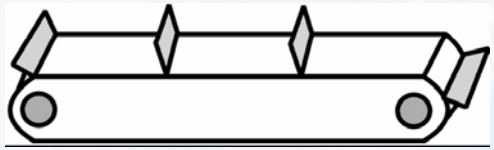

Continuous belt conveyor with flights

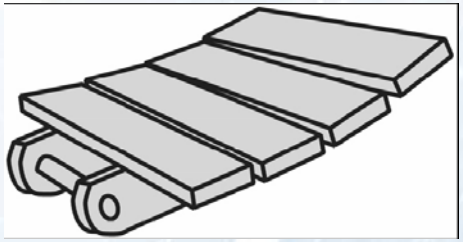

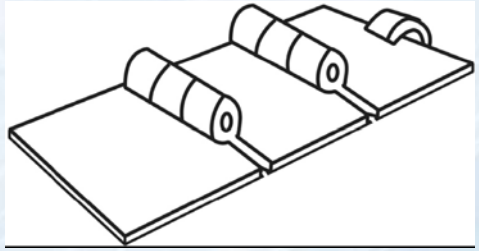

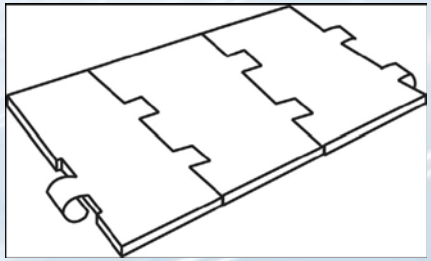

Segmented conveyor belt

3. Pengatur Posisi

Pick-and-place manipulators

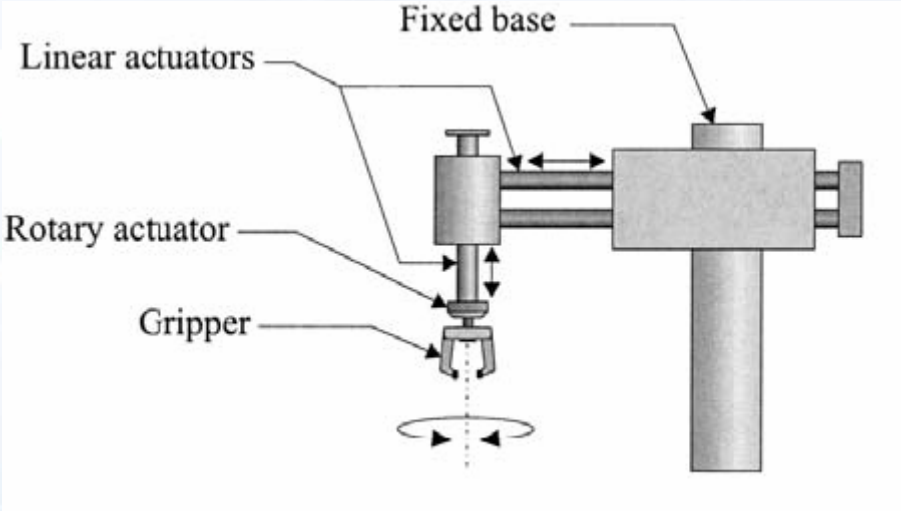

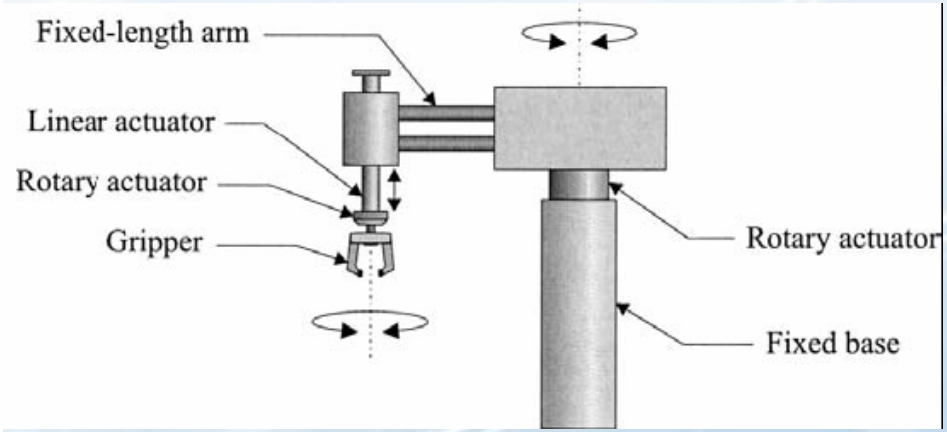

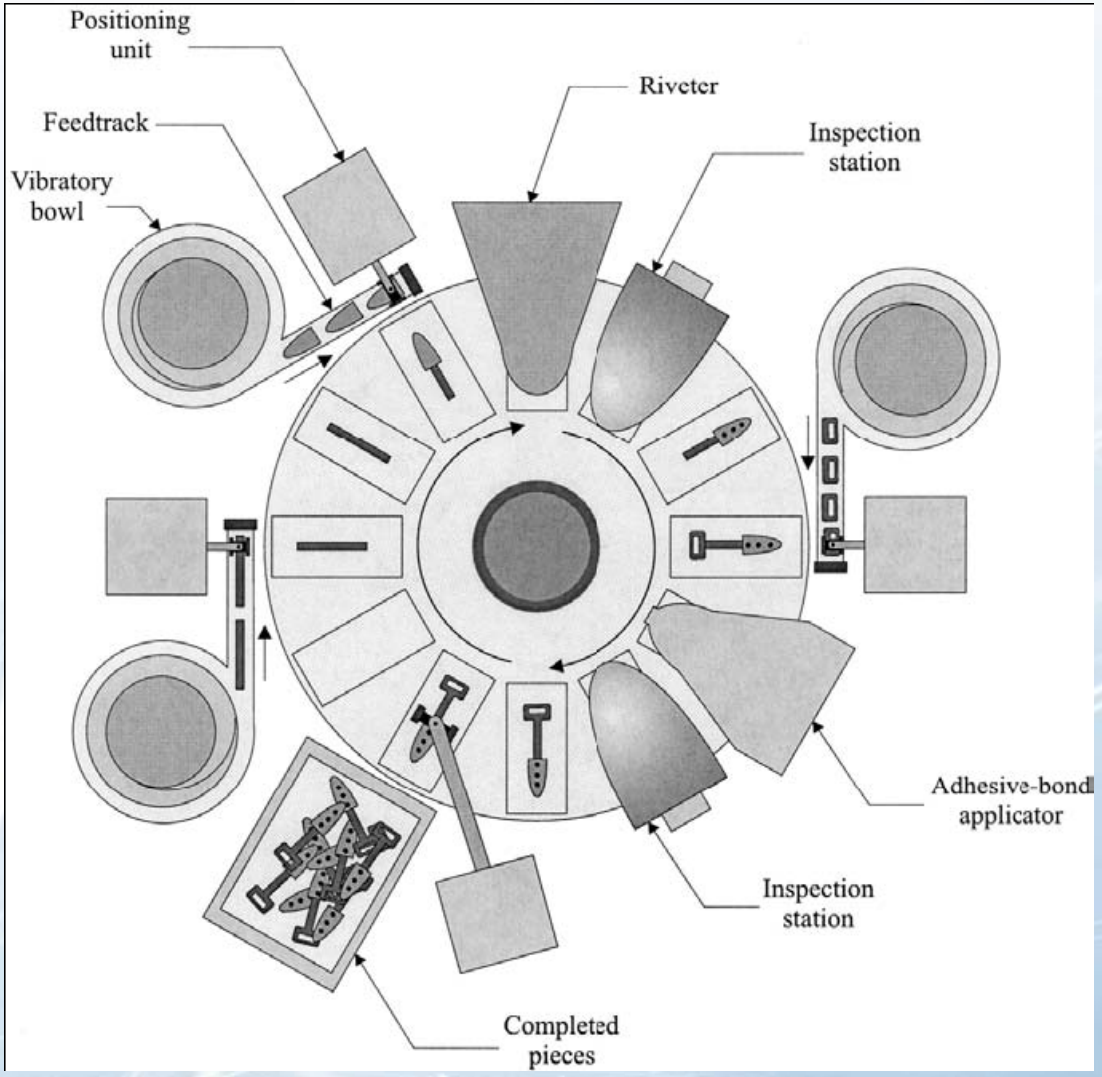
Positioning unit
Feedtrack
Vibratory bowl
Riveter
Inspection station
Adhesive-bond applicator
Inspection station
Completed pieces

Pertimbangan Desain Komponen

Do not

Open spring-lock washer will entangle.

Do

Closed spring-lock washer will entangle only under pressure.

Straight slot will entangle.

Crank slot will not entangle.

Part Feeding

Parts will nest.

Rib in part prevents nesting.

Pertimbangan Desain Komponen

Do not

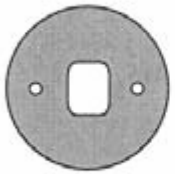

Circular shape makes it difficult to properly orient the holes.

Do

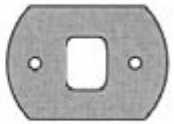

Nonfunctional flat edges help in orienting the holes.

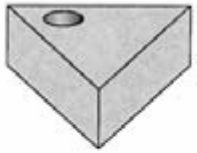

Triangular shape makes it difficult to properly orient the hole.

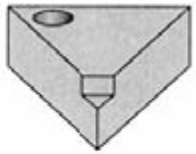

Nonfunctional shoulder helps orient the hole.

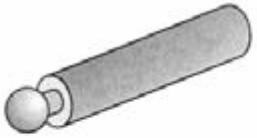

Tubular shape makes it difficult to properly orient head.

Double head allows two possible correct orientations.

Part Orienting

Pertimbangan Desain Komponen

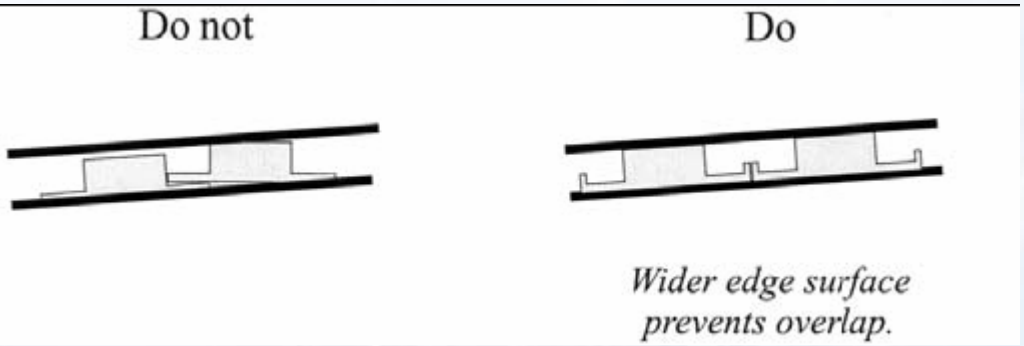

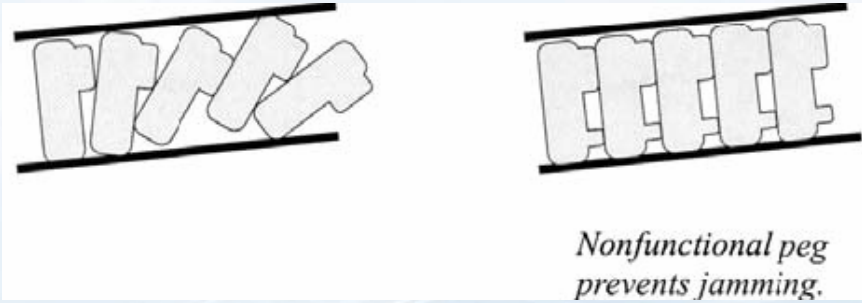

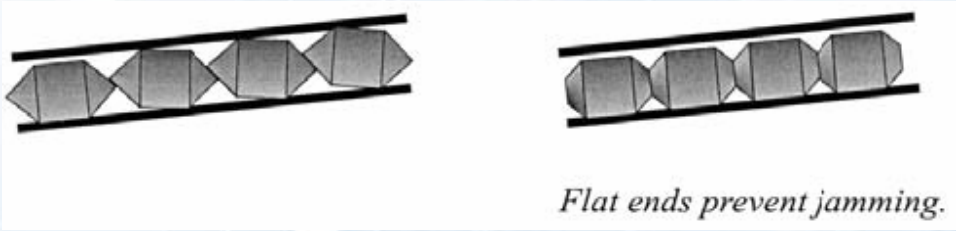

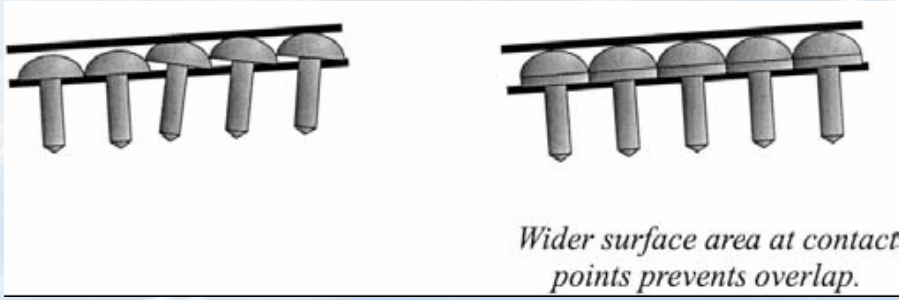

Part transportation

Pertimbangan Desain Komponen

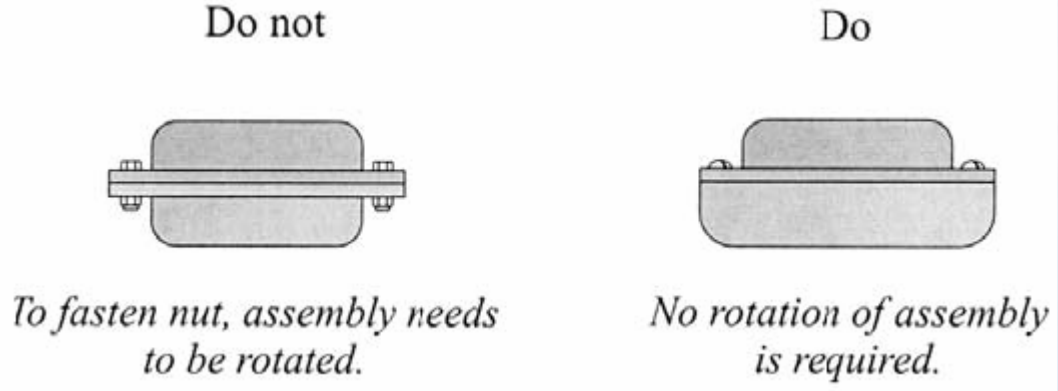

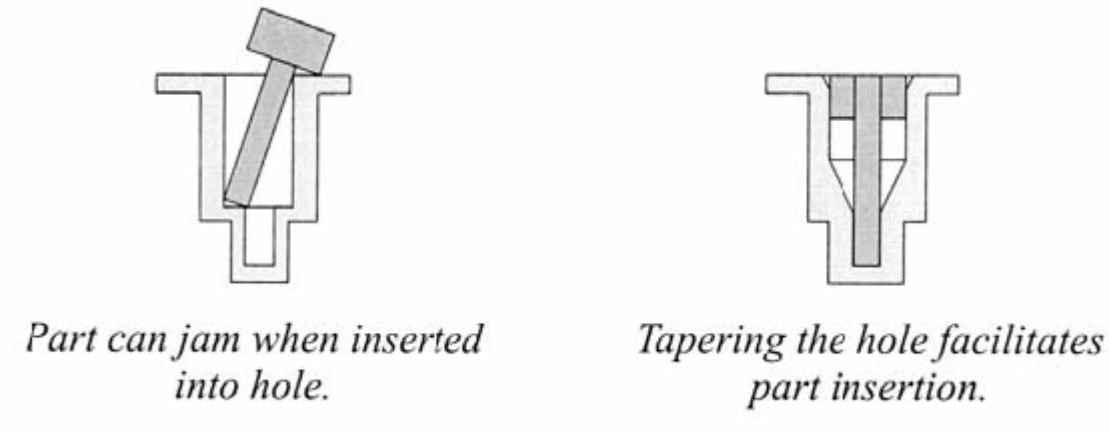

Part Positioning

Pertimbangan Desain Komponen

Parts are difficult to assemble.

Chamfers assist assembly.

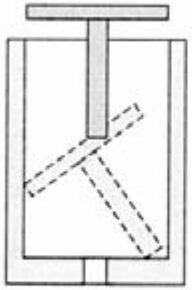

Parts are difficult to align properly; jamming can occur.

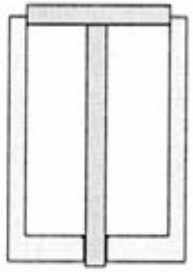

Changing part geometry allows it to be aligned properly before it is released.

Part Positioning